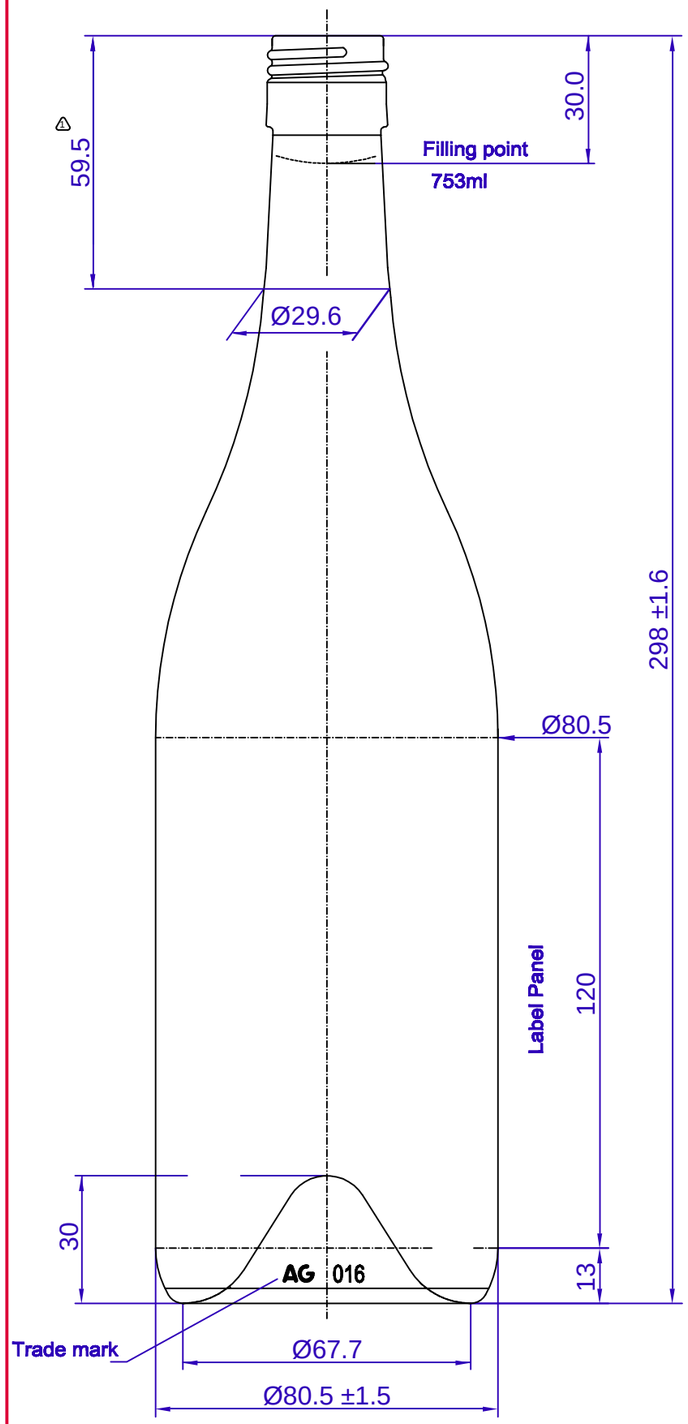

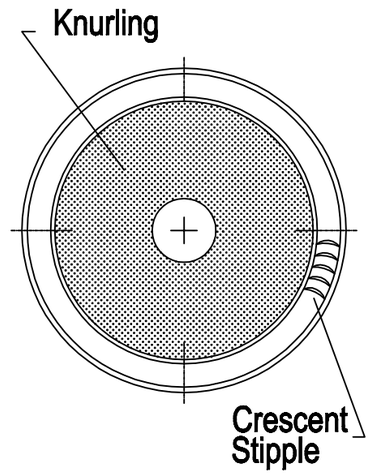

Bottom view

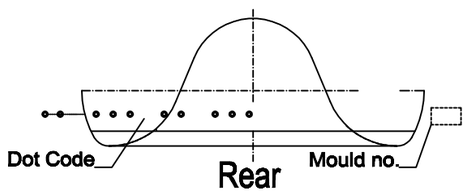

Rear

THIS DRAWING IS THE PROPERTY OF
AMCOR GLASS
AUSTRALASIA
AND IS COPYRIGHT

NUMBER	AG_016_R01
NAME	750mL BVS BURGUNDY
CAPACITY	753ml ±5.5
FILL POINT	30mm
BRIMFULL theor.	762.0
WEIGHT	515g
INTERNAL PRESSURE	N/A
FINISH NAME	30x60 BVS
FINISH NUMBER	R01

REV.	DETAILS	DATE
REVISION A INITIAL ISSUE DRAFT	△1 REVISED SHOWN AS REQ.	18/08/03 09/07/03 03/07/03

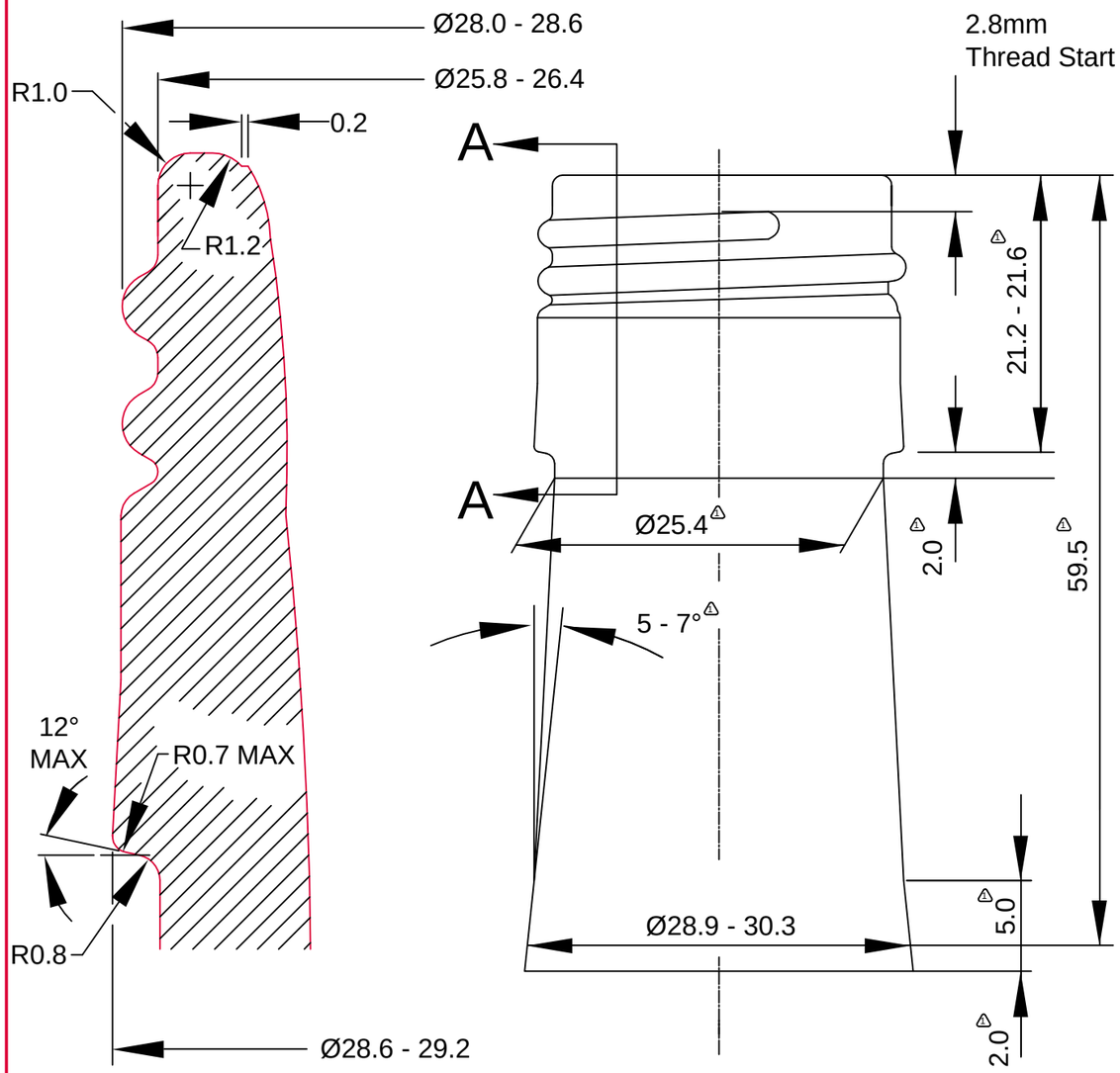

SECTION A-A

The minimum through bore diameter is 16.10mm

THREAD DETAIL

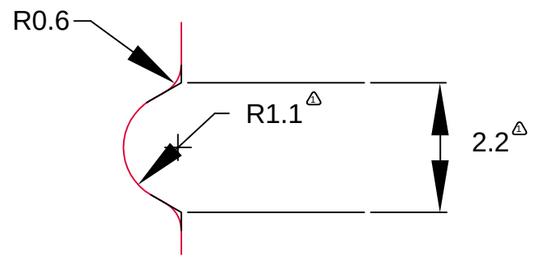

PITCH 3.63

THIS DRAWING IS THE PROPERTY OF
AMCOR GLASS
AUSTRALASIA
AND IS COPYRIGHT

FINISH NAME	30x60 BVS
FINISH NUMBER	R01

REV.	DETAILS	DATE
REVISION D REVISION C REVISION B REVISION A INITIAL ISSUE DRAFT	△1 REVISED SHOWN AS REQ SKIRT ANGLE WAS 15° MIN. THROUGH BORE DIA. ADDED REVISED CAVITY DETAILS	18/08/03 11/06/03 21/02/03 03/01/03 19/12/02 25/03/02